IKO Roofbox S Range

Technical Data Sheet – Section 11.00

PRODUCT INFORMATION

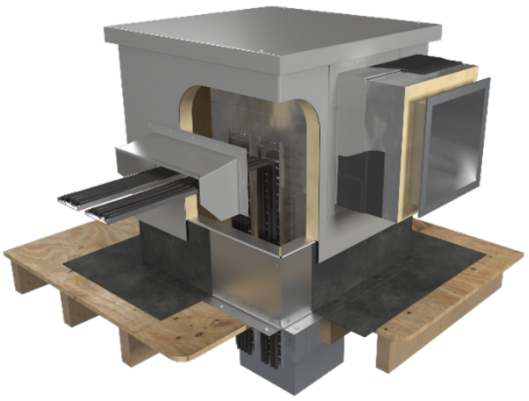

The IKO Roofbox S range of standard cabinets are supplied directly to site, fully assembled and ready to fit. They can be ordered with various base options to allow integration with most roof constructions. The S1, S2 & S3 are supplied with a weathering hood. Bespoke versions of the S range are also available.

A wide range of sizes are available and is compatible with most waterproofing systems including IKO reinforced bitumen membranes, IKO liquid applied roofing systems in warm roof constructions.

Pre-assembled
The IKO Roofbox S cabinets are supplied pre-assembled and are ready to install on arrival at site. Simply remove the cabinet and weather the base to the roof. Replace the cabinet and lid and installation is complete and ready for the M&E contractors.

Removable lids
The IKO Roofbox S cabinets have a removable lid with fasteners to provide easy access for M&E contractors. This facilitates the retrospective installation of services such as cables, pipes and ducts through the IKO Roofbox S.

Insulated aluminium construction
provide enhanced thermal performance and helps to prevent condensation

IKO Roofbox S cabinets are manufactured from 2.0mm aluminium insulated internally with 50mm PIR insulation giving 0.41 U value. Further insulation options can be supplied to provide enhanced U value and fire ratings where desired.

Material

- 5251 grade aluminium frames, flashings and panels
- 50mm foil faced PIR insulation
- Stainless steel fixtures and fittings, colour matched where required
- Compressible PUR foam seal & HDPE thermal break

IKO Roofbox S range
S1 for 300mm x 300mm openings

- OA size: 500mm x 500mm x277mm
- Kerb heights: UPVC: 150mm; Insulated aluminium: 200mm/375mm/450mm/600mm

S2 for 400mm x 700mm openings

- OA size: 600mm x 900mm x277mm
- Kerb heights: Insulated aluminium: 200mm/375mm/450mm/600mm

S3 for 600mm x 900mm openings

- OA size: 800mm x 1100mm x277mm
- Kerb heights: Insulated aluminium: 200mm/375mm/450mm/600mm

IKO PLC is a company registered in England with company no. 2678296

IKO Roofbox S1 Cabinet

The IKO Roofbox S1 Cabinet is a standard, insulated, powder-coated, aluminium roof cabinet for a 300mm x 300mm riser opening, finished in RAL 7047. It is supplied pre-assembled with a removable lid for easy installation of multiple services and a pre-fitted 300mm weathering hood to protect the services where they enter the cabinet.

An appropriate kerb height can be selected to enable integration into the roof build up.



Kerb upstand
The IKO Roofbox S1 Cabinet is designed for use with the S1-AB kerbs and come in 5 different heights to facilitate integration with various types of roof construction.
See compatible S1-AB kerbs.

Weathering accessory
IKO Roofbox S1 Cabinet is supplied with 1no. H30 hood.

IKO Roofbox S1:
Dimensions

- OA cabinet length: 454mm
- OA cabinet width: 454mm
- OA cabinet height from kerb to top of lid: 277mm:

To suit opening sizes: 300mm x 300mm

- Max services height: 150mm
- Max services width side 1: 400mm
- Max services width side 2: 700mm

IKO PLC is a company registered in England with company no. 2678296

IKO Roofbox S2 Cabinet

The IKO Roofbox S2 Cabinet is a standard, insulated, powder-coated, aluminium roof cabinet for a 400mm x 700mm riser opening, finished in RAL 7047. It is supplied pre-assembled with a removable lid for easy installation of multiple services and a pre-fitted 700mm weathering hood to protect the services where they enter the cabinet.

An appropriate kerb height can be selected to enable integration into the roof build up.

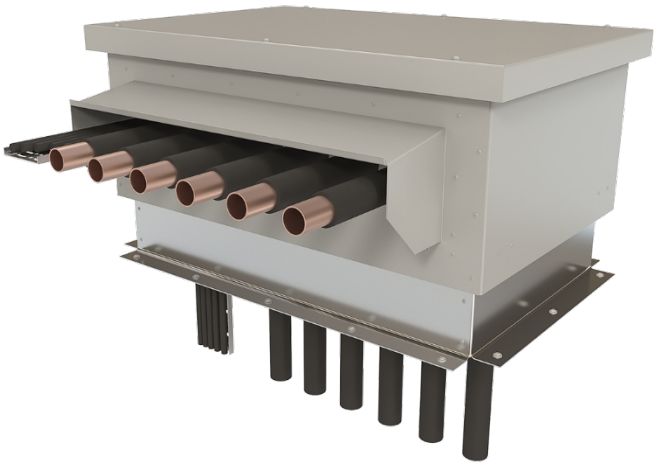

Kerb upstand
The IKO Roofbox S2 Cabinet is designed for use with the S2-AB kerbs and these come in 5 different heights to facilitate integration with various types of roof construction.

Weathering accessory
IKO Roofbox S2 Cabinet is supplied with 1no. H70 hood

IKO Roofbox S2:
Dimensions

- OA cabinet length: 854mm
- OA cabinet width: 554mm
- OA cabinet height from kerb to top of lid: 277mm:

To suit opening sizes: 400mm x 700mm

- Max services height: 150mm
- Max services width side 1: 400mm
- Max services width side 2: 700mm

IKO PLC is a company registered in England with company no. 2678296

IKO Roofbox S3 Cabinet

The IKO Roofbox S3 Cabinet is a standard, insulated, powder-coated, aluminium roof cabinet for a 600mm x 900mm riser opening, finished in RAL 7047. It is supplied pre-assembled with a removable lid for easy installation of multiple services and a pre-fitted 900mm weathering hood to protect the services where they enter the cabinet.

An appropriate kerb height can be selected to enable integration into the roof build up.

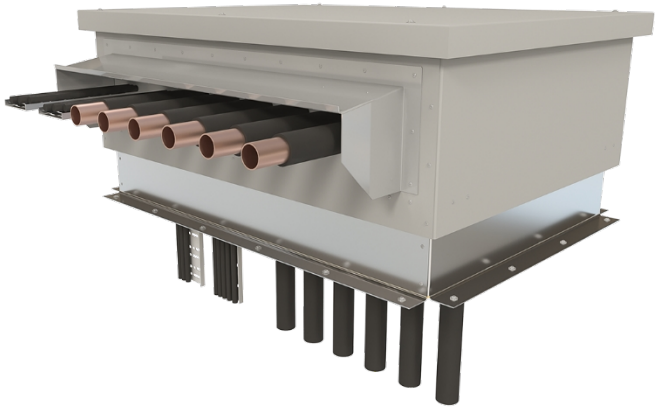

Kerb upstand
The IKO Roofbox S3 Cabinet is designed for use with the S3-AB kerbs and these come in 5 different heights to facilitate integration with various types of roof construction.

Weathering accessory
IKO Roofbox S3 cabinet is supplied with 1no. H90 hood. Additional hoods or weathering flashings can be supplied if necessary. Enquire for more information.

The S3 CABINET is compatible with the S3-AB kerb

IKO Roofbox S3:
Dimensions

- OA cabinet length: 1054mm
- OA cabinet width: 754mm
- OA cabinet height from kerb to top of lid: 277mm:

To suit opening sizes: 600mm x 900mm

- Max services height: 150mm
- Max services width side 1: 600mm
- Max services width side 2: 900mm

IKO PLC is a company registered in England with company no. 2678296

INSTALLATION

Each unit is to be secured and waterproofed in accordance with the IKO recommendations.

IKO Roofbox S Standard Kerb Heights
There is a range of standard Kerb heights 150/200/375/450/600

IKO Roofbox units S1 – S3 can be combined with all kerb heights

IKO Roofbox units S4 – S6 can be combined with kerbs AB200 – AB600 only

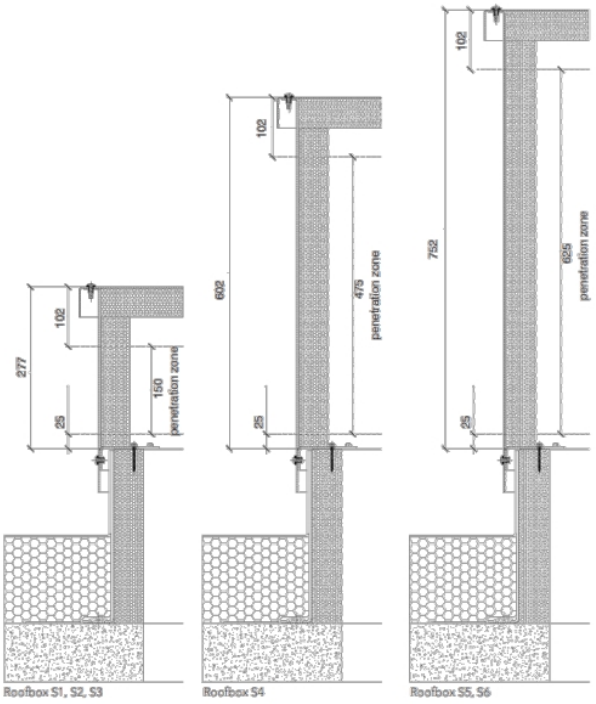

IKO Roofbox Standard Unit Penetration Zones
Please ensure that the services to be passed through the IKO Roofbox unit will fall into the penetration zone for the selected units.

NOTE – Units can be raised or lowered by selecting the correct height kerb section.

IKO PLC is a company registered in England with company no. 2678296

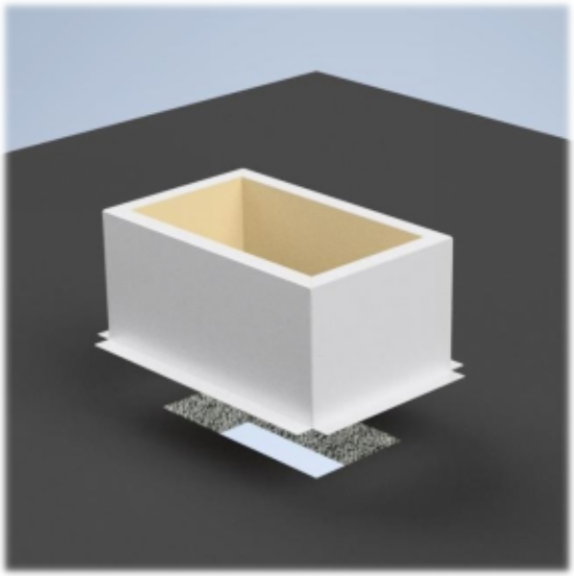

Fixing the Kerb (if Roofbox is supplied c/w upstand)
The kerb section should be separated from the unit by releasing the internal fixings allowing the kerb to be fixed to the substrate with a mastic seal and using suitable fixings through the kerb flange
The kerb should be fitted ensuring it is level and flat.

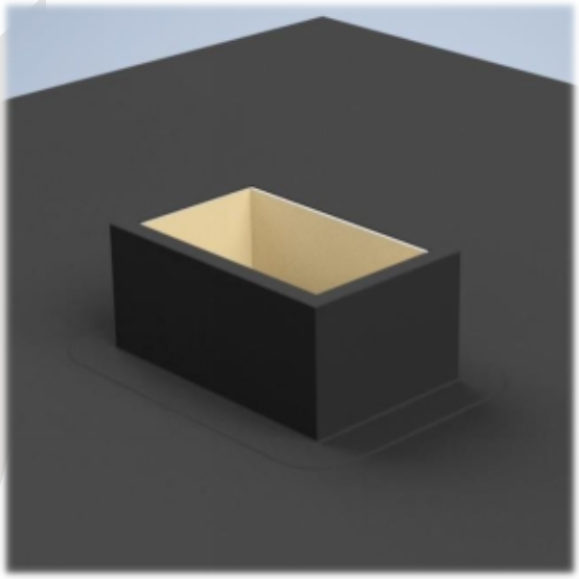

Waterproofing the Kerb section
The kerb should be dressed with waterproofing membrane in accordance with best practice details and parameters as set out by the roof system manufacturer.

IKO PLC is a company registered in England with company no. 2678296

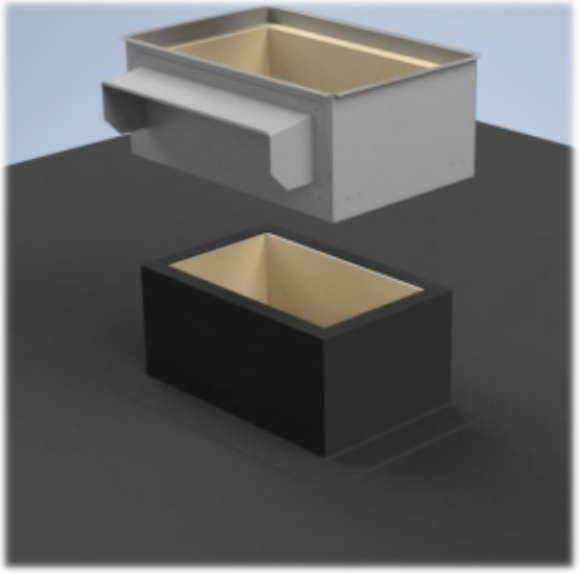

Fitting the IKO Roofbox unit

Fit the IKO Roofbox cabinet onto the weathered kerb upstand. If required, install a mastic seal between the cabinet and the upstand (to reduce air permeability) Install adequate hold-down fixings to secure the cabinet, ensuring the fixings are installed into an adequate fixing substrate

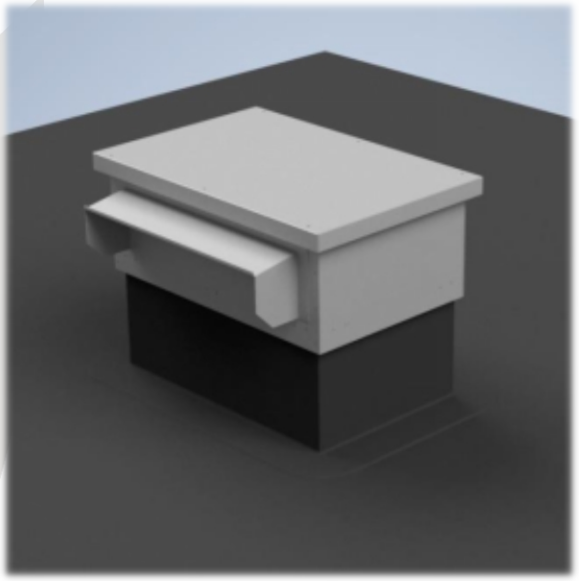

Replace the lid

Replace the lid and secure to the unit using the fixing provided, the unit should now be weathertight and can be left until the services are ready to be brought through the unit.

Important note – Take care to avoid any cross threading.

Fixing screws should be started by hand then tightened with care once thread is properly engaged

IKO PLC is a company registered in England with company no. 2678296

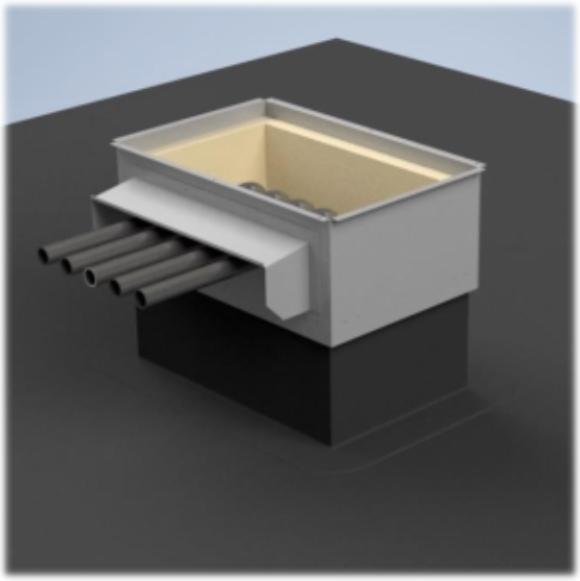

Install the services

To install the services through the unit, the lid should be removed. Holes for each service penetration should be drilled keeping the apertures as small as possible and as close to the underside of the weathering hood as possible. Each service penetration should be sealed to the unit using a suitable mastic sealant..

NOTE! Services should be installed with a fall away from the unit to stop water tracking along the pipework.

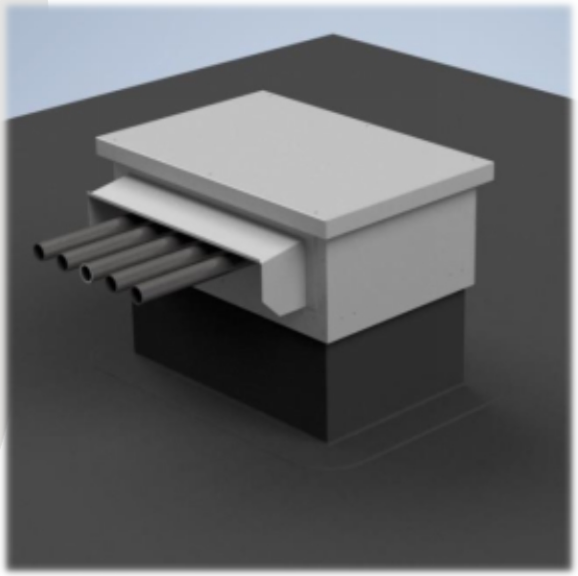

Replace the lid ensuring it is firmly secured with all fixing bolts provided.

Important note – Take care to avoid any cross threading.

Fixing screws should be started by hand then tightened with care once thread is properly engaged

Further weathering hoods can be ordered separately and added to the IKO Roofbox at any time.

IKO PLC is a company registered in England with company no. 2678296

WEATHERING PIPES AND CABLES



Step 1
Cut or drill the correct size hole for each service penetration.
Allow a 5mm tolerance around the services (including any insulation). Make good cut edges with touch up paint.

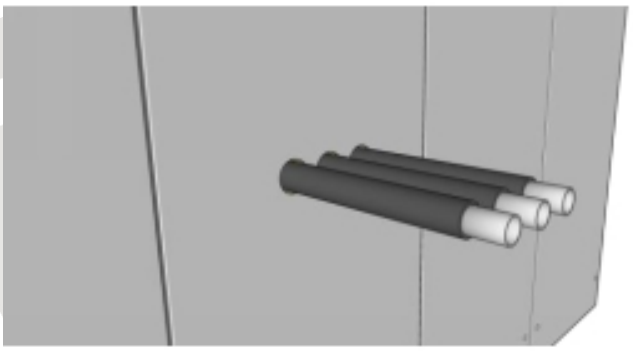

Step 2
install the services through the IKO Roofbox panel – ensure that any services penetrating the Roofbox have a fall of at least 1° away from the panel face.

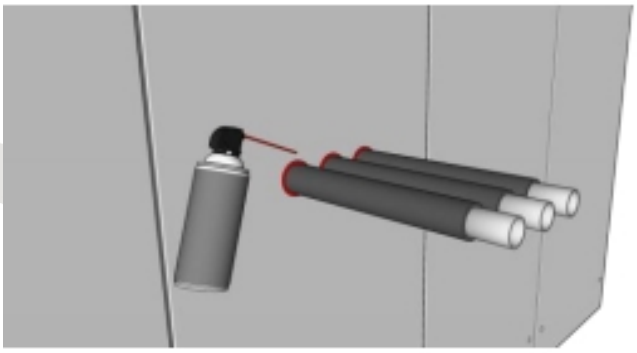

Step 3
Using a proprietary mastic sealant, or if necessary, a proprietary filler foam, seal between the services and the IKO Roofbox panel.

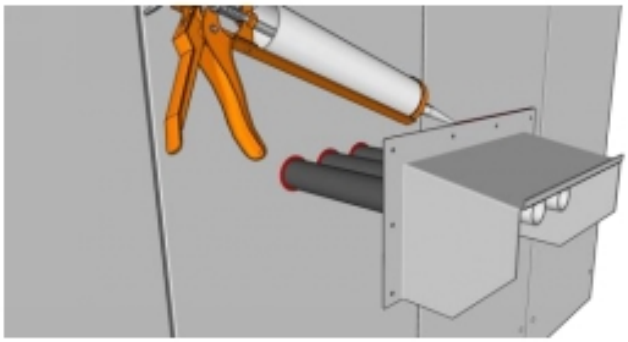

Step 4
Apply a mastic seal to the weathering hood.

IKO PLC is a company registered in England with company no. 2678296

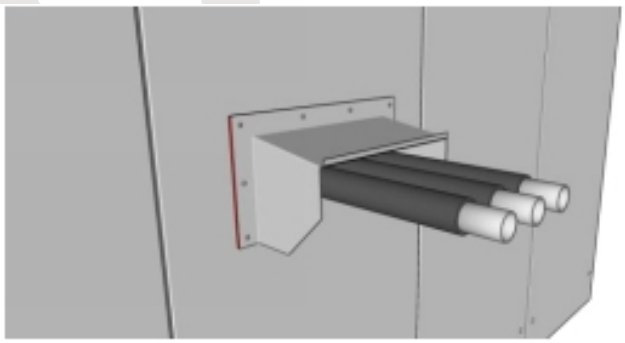

Step 5
Fix the weathering hood as low as possible over the services to provide weather protection to the service penetrations. Use the 25mm self-sealing fixing screws supplied in the Roofbox fixing pack.

CABLE TRAYS



Step 1
Cut a letterbox hole as small as possible.
Make good cut edges with touch up paint.

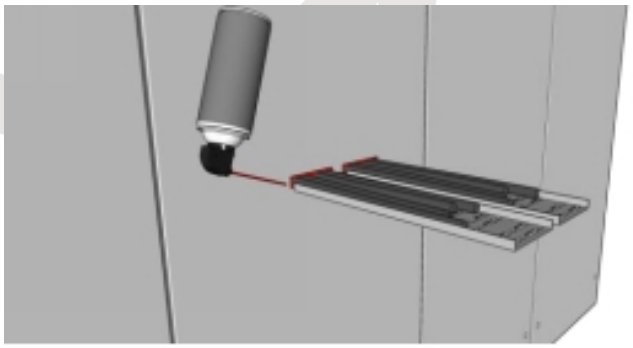

Step 2
Run the services through the Roofbox panel - ensure a minimum 1° fall away from the Roofbox. Use the IKO Roofbox gap filler to fill the open space in the letterbox holes.

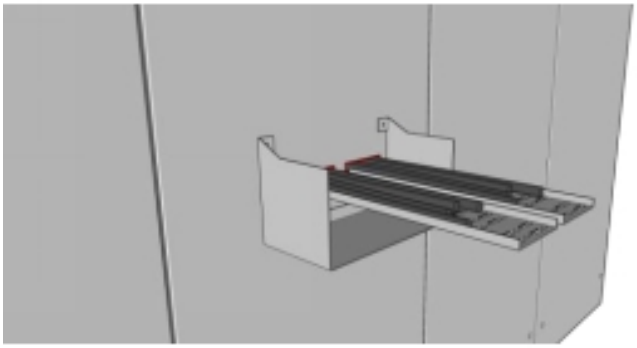

Step 3
Fit the underhood to the panel, lift as high as possible

IKO PLC is a company registered in England with company no. 2678296

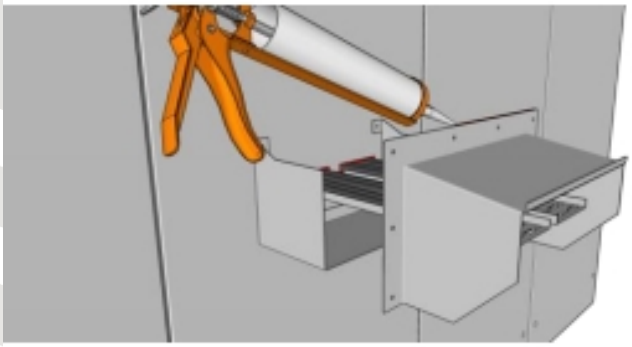

Step 4
Apply a mastic seal to the weathering hood.

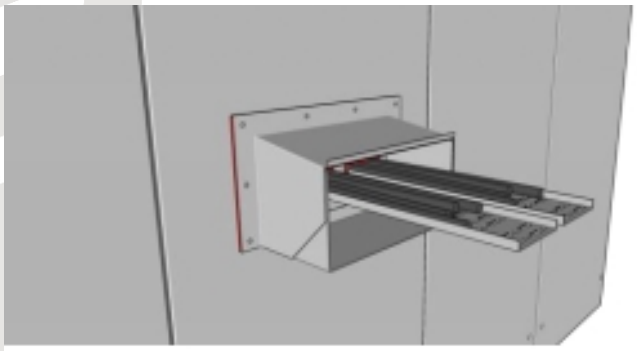

Step 5
Fix the weathering hood as low as possible over the services to provide weather protection to the service penetration.

DUCTS

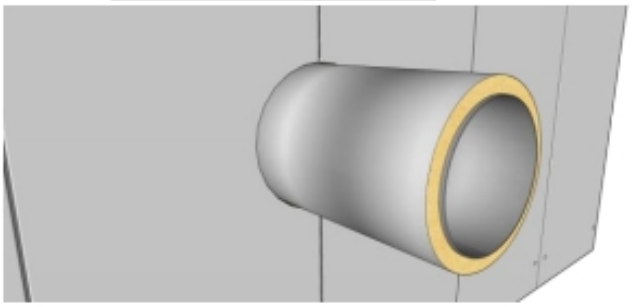

Step 1
Ensure the panels are cut closely to the duct allowing a 5mm tolerance. Make good the paint finish to cut edges.

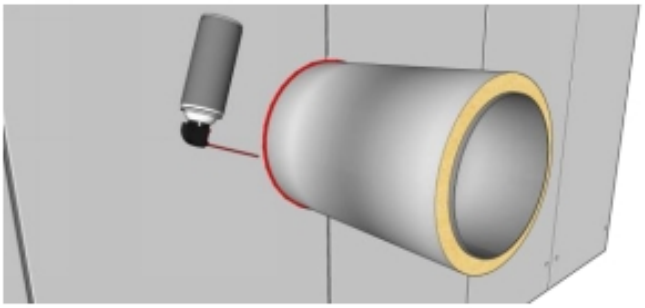

Step 2
Seal the duct to the panel using the Roofbox gap filler or a proprietary mastic.

IKO PLC is a company registered in England with company no. 2678296

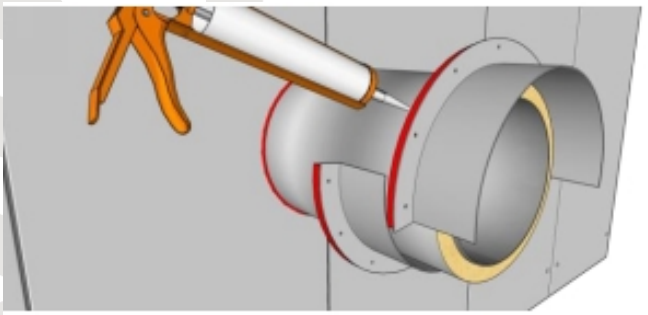

Step 3
Slide the two halves of the split flashing over the duct ensuring the top part overlaps the lower part. Apply colour matched sealant to the back of the flange.

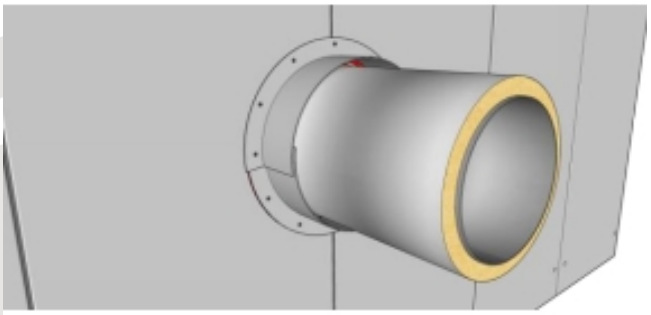

Step 4
Fix the two parts to the panel using the colour matched fixings supplied. Apply a mastic seal between the two parts where they overlap.

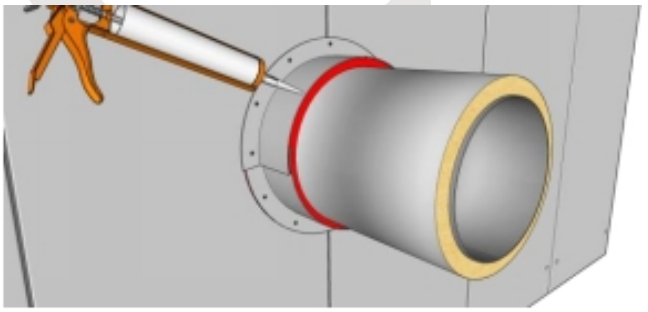

Step 5
Using Roofbox gap filler or a proprietary mastic, make a seal between the split circular flashing and the duct.

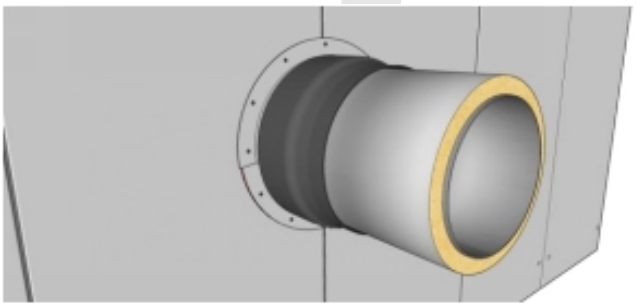

Step 6
Apply a flexible self-adhesive flashing to seal to the spigot and to the duct. The final lap should be on the underside of the duct.

IKO PLC is a company registered in England with company no. 2678296

DUCTS USING ONE PIECE FLASHING

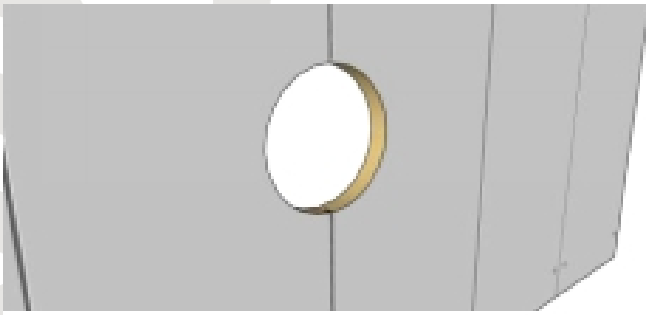

Step 1
Cut installed panels to provide an aperture for the duct allowing 5mm tolerance including any insulation. Make good the paint finish to cut edges.

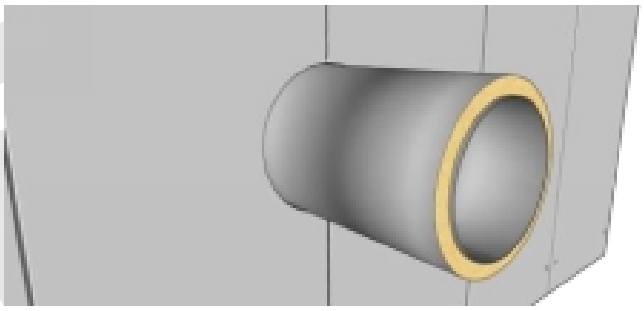

Step 2
Install ductwork (including any insulation).

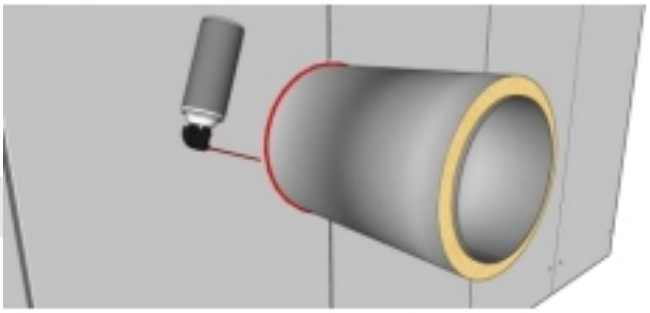

Step 3
Use the Roofbox gap filler or a proprietary mastic to seal the duct to the hole.

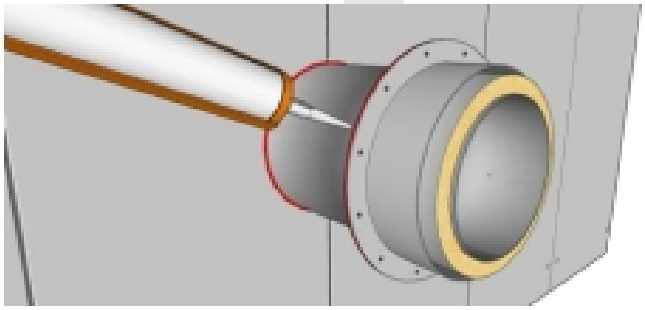

Step 4
Slide the circular flashing over the duct and apply colour matched mastic to the back of the flange.

IKO PLC is a company registered in England with company no. 2678296

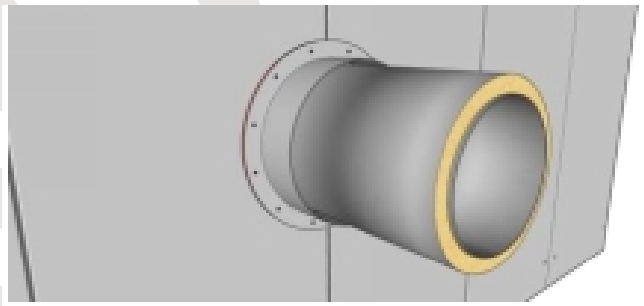

Step 5
Fix the circular flashing to the panels using the 25mm colour matched fixings supplied.

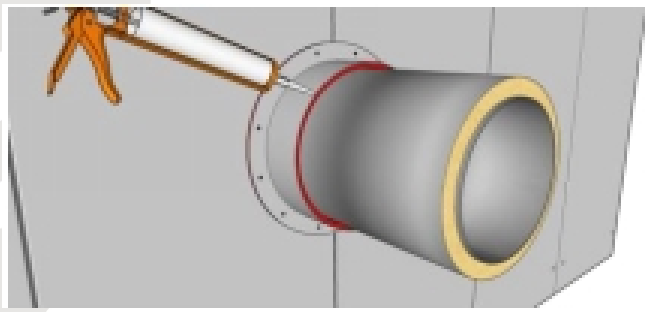

Step 6
Using Roofbox gap filler or a proprietary mastic, make a seal between the duct and the circular flashing.

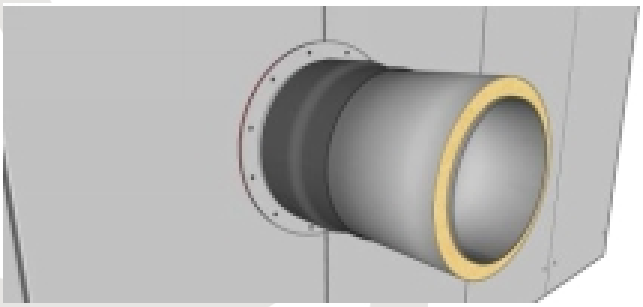

Step 7
Apply a flexible self-adhesive flashing sealing to the spigot and to the duct.
The final lap should be on the underside of the duct.

IKO PLC is a company registered in England with company no. 2678296

DUCTS - SQUARE

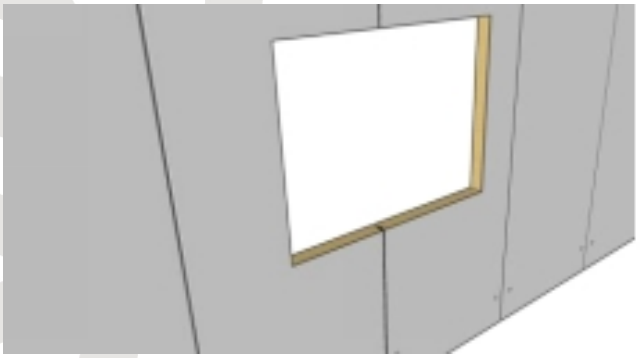

Step 1
Cut the panels to make an aperture for the duct with a 5mm tolerance. Make good the paintwork to cut edges.

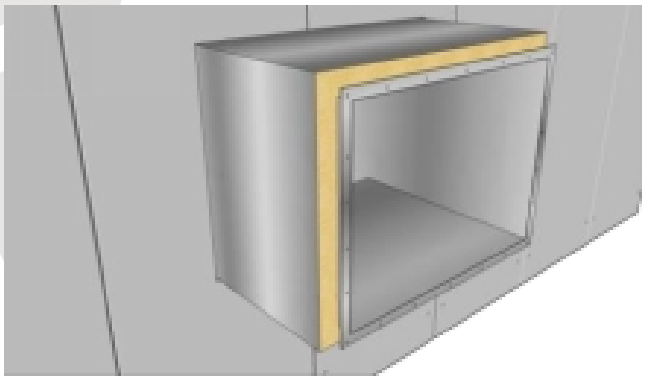

Step 2
Install ductwork (and insulation if necessary) through the hole in panels. Ensurethat duct falls 1 degree away from IKO Roofbox.

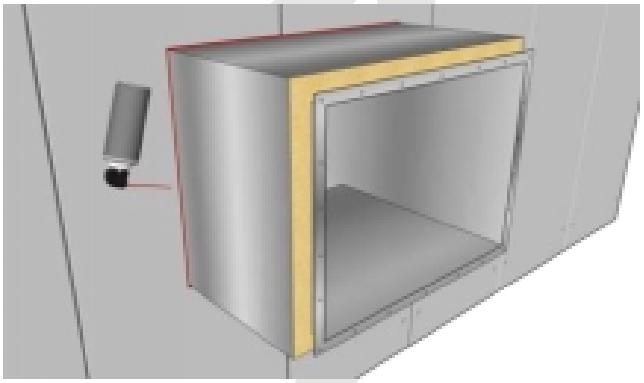

Step 3
Seal between duct and panels using IKO Roofbox gap filler or a proprietary mastic.

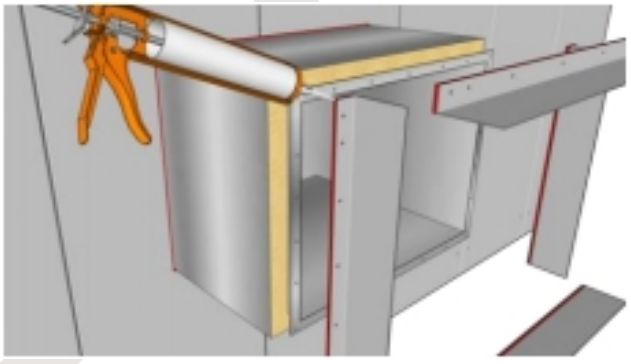

Step 4
Arrange the straight lengths to match theduct and apply colour matching mastic to the back of the flange.

IKO PLC is a company registered in England with company no. 2678296

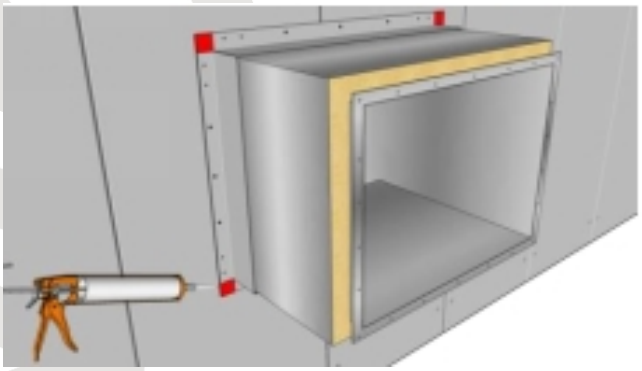

Step 5
Fix the straight lengths to the panels around the duct using the colour matched screws. The lengths should just meet at the corners.

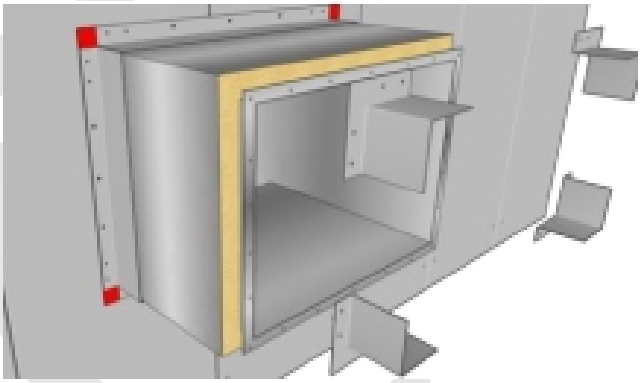

Step 6
Fit the corner pieces using colour matched mastic to seal them. Fix in posi tion with colour matched fixings supplied.

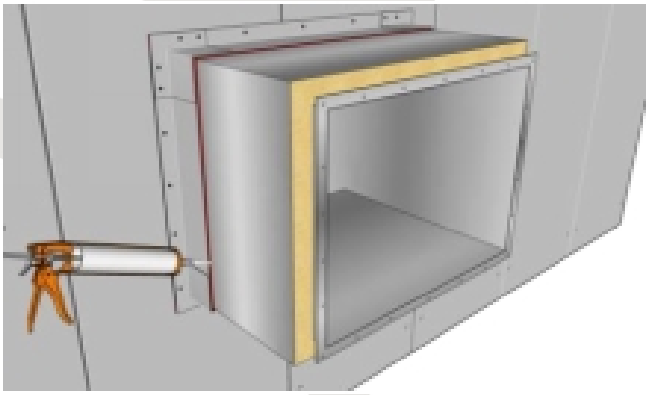

Step 7
Seal between the flashing and the duct using a proprietary sealant.

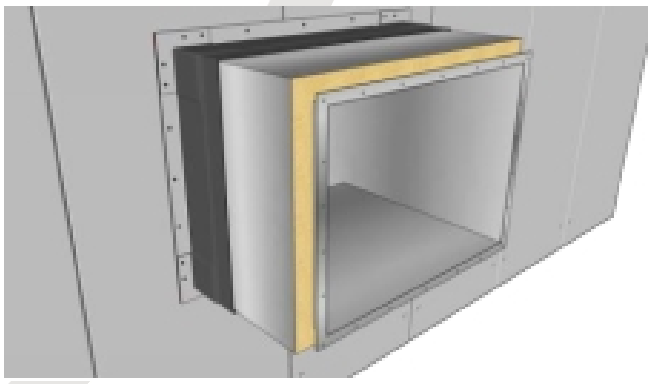

Step 8
Apply a flexible self-adhesive flashing over the joint between the universal flashing and the duct. The final lap should be on the underside.

IKO PLC is a company registered in England with company no. 2678296

OTHER RELEVENT DOCUMENTATION

Where applicable, Material Safety Data Sheets (MSDS), Declaration of Performances (DoPs), and Third-Party Accreditations are available to view and download from the IKO website Resource Centre:
https://ikogroup.co.uk/resource-centre/

PRODUCT SUPPORT

Should you have any queries in relation to this product please contact one of the relevant teams below:

Technical technical.ab@iko.com
- For Reinforced Bitumen Membranes, IKOpro and Flexia Liquid Applied Waterproofing, Pitched Roofing, IKO Hyload Structural Waterproofing

technical.ma@iko.com
- For Mastic Asphalt

technical.cc@iko.com
- For Single Ply and Permatec Hot Melt

Sales sales.uk@iko.com
Marketing getintouch.uk@iko.com

COMPANY ACCREDITATIONS

IKO PLC, a roofing, waterproofing, and insulation company, holds various accreditations that demonstrate its commitment to quality, safety, and environmental responsibility. These include ISO certifications for quality management and occupational health and safety, British Board of Agrément (BBA) accreditations for specific products and systems, and Factory Mutual (FM) approval for certain roofing systems.

All our manufacturing plants have BS EN ISO 9001, BS EN ISO 14001, BS EN ISO 45001, and BES 6001 accreditation, meaning we match the quality and sustainability requirements and use responsibly sourced raw materials in our production. We also re-use by-products from manufacture, wrap products in minimal packaging, and we employ a streamlined transportation network.

IKO is also a leading member of all relevant trade associations such as NFRC, BFRA, SPRA, LRWA, MAC, RSTA, BJA and LCRIG having technical experts within the technical and standards committees to help us get informed first-hand about recent updates on technical requirements for the design and installation of roofing, waterproofing, road and bridge maintenance industry products.

IKO PLC is a company registered in England with company no. 2678296

DISCLAIMER

Whilst every precaution is taken to ensure that the information given in this literature is correct and up-to-date it is not intended to form part of any contract or give rise to any collateral liability, which is hereby specifically excluded.

IKO reserves the right to amend and/or withdraw this document without notice.

Intending purchasers of our materials should therefore verify with the company whether any changes in our specification, application details, withdrawals or otherwise have taken place since this literature was published.

IKO PLC is a company registered in England with company no. 2678296