IKO Roofport - PVC

Technical Data Sheet – Section 11.00

PRODUCT INFORMATION



IKO Roofport are a range of preformed roof penetration units that provides a versatile solution for allowing small cabling and pipework to pass through a roof without compromising the waterproofing integrity of the roof.

Suitable for:

- Flexible air conditioning pipework
- Electrical cables
- IT cables
- PV cables
- Lightning conductors.

The powder coat cover unit is completely removable allowing easy installation of cabling.

A wide range of sizes are available and is compatible with most waterproofing systems including IKO reinforced bitumen membranes, IKO liquid applied roofing systems in warm roof, inverted and uninsulated flat roof constructions.

CABLE AND PIPE PENETRATION UNITS

Product reference: IKO Roofport SP - PVC
Use: Roof penetrations passing through a roof.
Type: Aluminium unit with PVC membrane flange
Sizes:

- RP50SP-PVC
- RP110SP-PVC
- RP150
    - 150mm upstand kerb
    - 400mm upstand kerb

See separate technical datasheets for RP150 units

Product Reference	Product Code
RP50SP - PVC Slate Grey	55520051
RP50SP - PVC Mid Grey	55520052
RP110SP- PVC Slate Grey	55520111
RP110SP - PVC Mid Grey	55520112

*Refer to IKO Specification Document for common product codes and relevant sizes or contact your local IKO Specification Area Business Manager.

IKO PLC is a company registered in England with company no. 2678296

PERFORMANCE & COMPOSITION

Composition:	stainless steel	
Form:	cable entry	
Colour:	Slate Grey Mid Grey	
PVC membrane flange	400mm x 400mm	
Stainless teel base plate	230mm x 230mm	
General Dimension Data		
Height (overall):	RP50PVC	360mm
Upstand:	RP50PVC	300mm
Internal diameter:	RP50PVC	45mm
Height (overall):	RP110PVC	426mm
Upstand:	RP110PVC	300mm
Internal diameter:	RP110PVC	108mm

Upstand units available as 300mm as standard and 400mm and 600mm available upon request for inverted flat roof constructions.

USE

RP50SP PVC
50mm diameter ready-made roof penetration unit suitable for PV cabling, lightning conductor's small diameter cables an IT cables.

RP110SP PVC
110mm diameter ready-made roof penetration unit for electrical cables, air con feeds for split units, IT cabling, armoured cabling and multi cable penetrations.

Comes with a powder coated hood and waterproofing flange to suit most waterproofing membranes.
Also available:

- RP50SBS and RP110 – factory applied SBS modified bitumen flange.
- RP50SS and RP110SS – for liquid applied roofing systems

This product must be installed by an IKO Approved or Registered Installer. All work must be undertaken in accordance with the requirements of the specific information provided with the issued IKO Specification document, or guidance documents where applicable.

IKO PLC is a company registered in England with company no. 2678296

INSTALLATION

Each unit is to be secured and waterproofed in accordance with the waterproofing manufacturer's recommendations

Roofport SP PVC



- The IKO Roofport SP PVC has a factory applied IKO Armourplan membrane.
- The IKO Roofport SP PVC must be installed on top of the IKO Armourplan waterproofing membrane.
- It should be positioned where the service pipes or cales will be located.
- The hood can be removed to allow the cables to be treaded through.
- Suitable fixing should be used to fix the base plate to the roof structural deck.
- Warm roof constructions must use thermally broken tube washer and appropriate fixings.
- The PVC membrane flange must be fully hot air welded in accordance with the manufacturer's recommendation to the IKO Armourplan membrane.

Removable hood

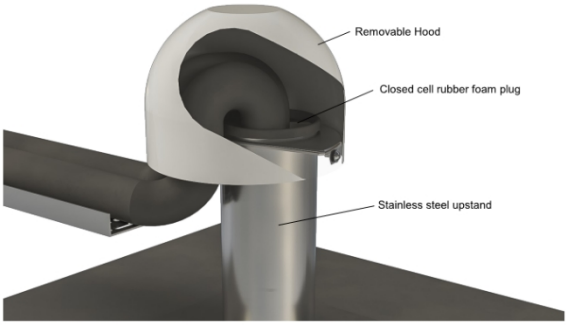

- The IKO Roofport has a removable hood that is secured by 4No screws.to remove the hood removed the screws and set aside for reuse.
- Remove the close cell foam plug is removed to allow for the cables to run through the unit and replace upon completion. The plug can be cut to suit but should be tightly fitted to resist entrance of insects and birds.
- Refit the hood upon completion.
- Do not apply undue pressure to the unit when installing any cables or pipework and cables must not be dragged through the unit.

IKO PLC is a company registered in England with company no. 2678296

Base plate and PVC membrane flange size:

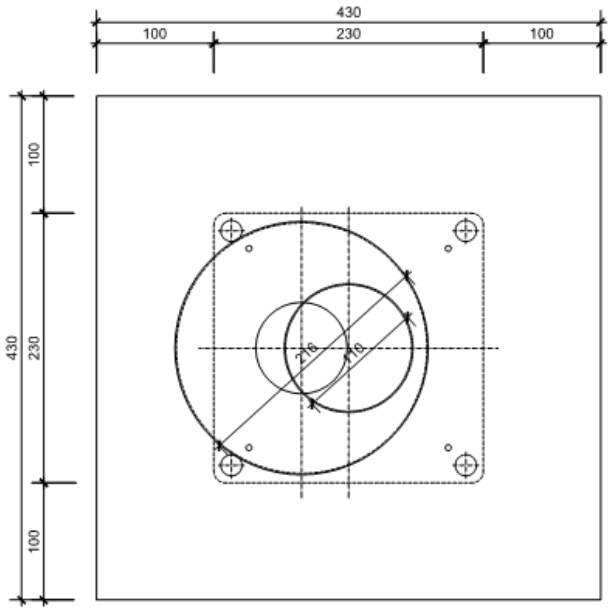

Roofport SP 50 PVC

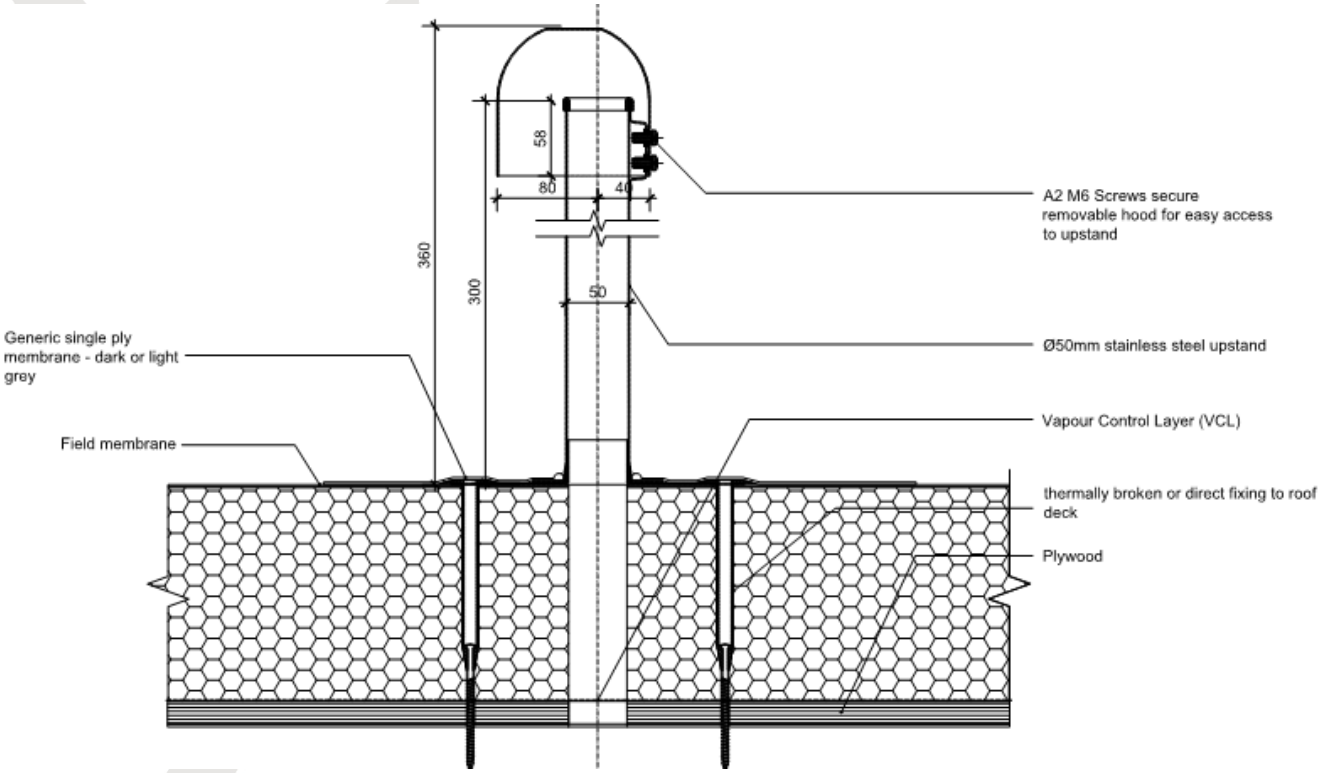

IKO PLC is a company registered in England with company no. 2678296

Roofport SP 110 PVC

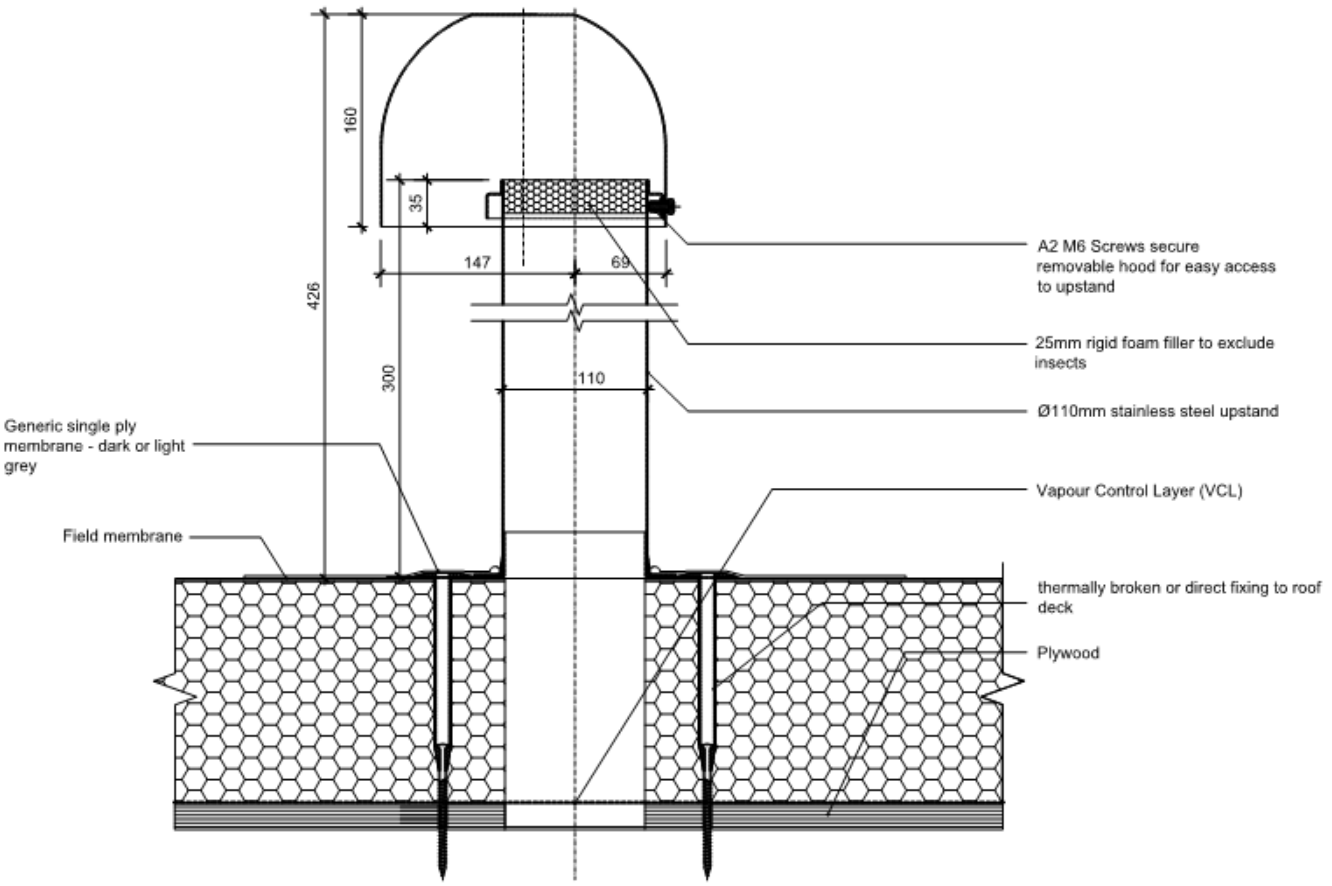

OTHER RELEVENT DOCUMENTATION

Where applicable, Material Safety Data Sheets (MSDS), Declaration of Performances (DoPs), and Third-Party Accreditations are available to view and download from the IKO website Resource Centre:
https://ikogroup.co.uk/resource-centre/

PRODUCT SUPPORT

Should you have any queries in relation to this product please contact one of the relevant teams below:

Technical technical.ab@iko.com
- For Reinforced Bitumen Membranes, IKOpro and Flexia Liquid Applied Waterproofing, Pitched Roofing, IKO Hyload Structural Waterproofing

technical.ma@iko.com
- For Mastic Asphalt

technical.cc@iko.com
- For Single Ply and Permatec Hot Melt

Sales sales.uk@iko.com

Marketing getintouch.uk@iko.com

IKO PLC is a company registered in England with company no. 2678296

COMPANY ACCREDITATIONS

IKO PLC, a roofing, waterproofing, and insulation company, holds various accreditations that demonstrate its commitment to quality, safety, and environmental responsibility. These include ISO certifications for quality management and occupational health and safety, British Board of Agrément (BBA) accreditations for specific products and systems, and Factory Mutual (FM) approval for certain roofing systems.

All our manufacturing plants have BS EN ISO 9001, BS EN ISO 14001, BS EN ISO 45001, and BES 6001 accreditation, meaning we match the quality and sustainability requirements and use responsibly sourced raw materials in our production. We also re-use by-products from manufacture, wrap products in minimal packaging, and we employ a streamlined transportation network.

IKO is also a leading member of all relevant trade associations such as NFRC, BFRA, SPRA, LRWA, MAC, RSTA, BJA and LCRIG having technical experts within the technical and standards committees to help us get informed first-hand about recent updates on technical requirements for the design and installation of roofing, waterproofing, road and bridge maintenance industry products.

DISCLAIMER

Whilst every precaution is taken to ensure that the information given in this literature is correct and up-to-date it is not intended to form part of any contract or give rise to any collateral liability, which is hereby specifically excluded.

IKO reserves the right to amend and/or withdraw this document without notice.

Intending purchasers of our materials should therefore verify with the company whether any changes in our specification, application details, withdrawals or otherwise have taken place since this literature was published.

IKO PLC is a company registered in England with company no. 2678296